DGHT0D6/4337/KH

Highway D400 3 flange gully grate 370mm x 430mm clear opening with 150mm frame depth

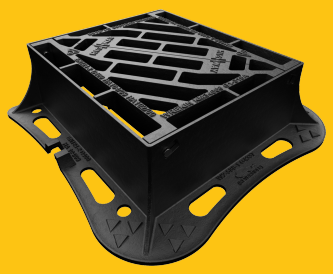

RANGE	CLEAR OPENING (MM)	BASE OPENING (MM)	OVERALL FRAME (MM)	FRAME DEPTH (MM)	WATERWAY AREA (CM^2)	OPTIONS
Highway	370 x 430	390 x 450	565 x 545	150	1,000	☐ Screw locking

KEY FEATURES

- Non rocking 3-point suspension design, for silent operation.
- Captive hinges reduce theft risk whilst allowing easy lifting.
- Frame gussets are supports which reinforce the corners where the frame sections meet, distributing stress evenly, preventing damage to the frame or the access cover.
- Keyway lifting points are provided on the frame for safe handling.
- Reversible hinge allows the grating to hinge with the direction of the traffic flow, improving safety.
- Surface texturing above and below the flange enables better mortar engagement, reducing any lateral movement which could result in cracking.
- Meets the requirements of CD 534 v0.1.0 (formerly HA 104/09).
- The enlarged frame corners help to dissipate loads onto the foundation, providing a longer service life and increased reliability.
- Indexed corners ensure correct orientation first time, every time.
- Holes in the frame flange where mortar can pass between the underside and top side, creating an interlock, providing greater strength.
- Unlike sharp, square-edged frames, rounded edges reduce stress concentrations and minimise crack formation.

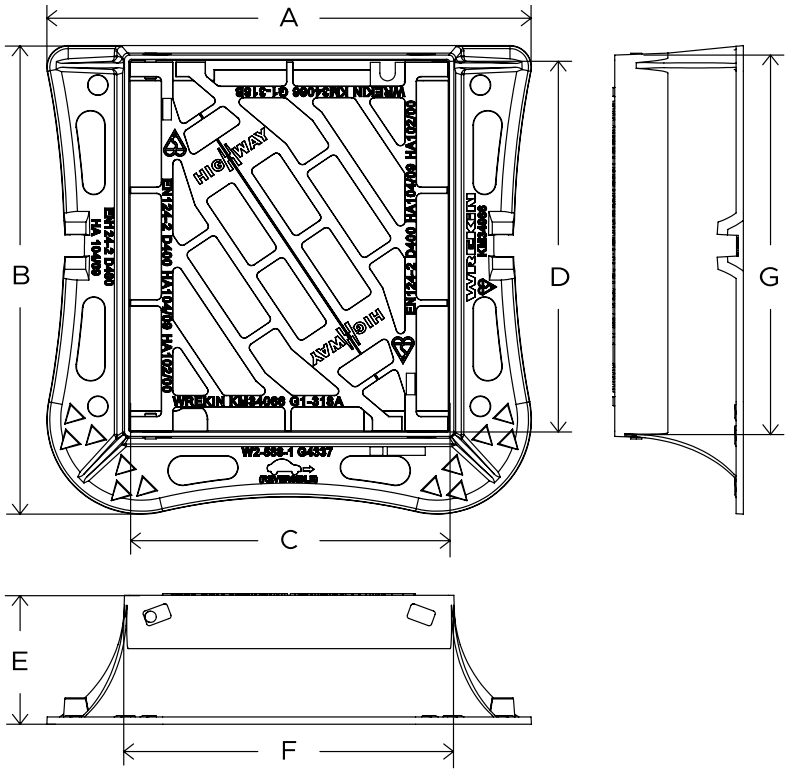

SPECIFICATION

General information

Stock code	DGHT0D6/4337/KH
Primary material	Ductile iron
Range	Highway
Category	Gully grate
Flanges	3

Standards, classes and groupings

Standards	BS EN 124-2 DMRB MCHW CD 534 v0.1.0
	D400

BS EN 124 Class	
BS EN 124 Group	3 4
Third party certified	Kitemark
CD 526 hydraulic capacity	R

Dimensions

Frame shape	Rectangular
Manhole shape	Rectangular
Overall frame (A x B)	565 mm x 545 mm
Clear opening (C x D)	370 mm x 430 mm
Frame depth (E)	150mm
Base opening (F x G)	390 mm x 450 mm
Waterway area	1,000cm²

AVAILABLE OPTIONS

- **Screw locking**
  Screw locking deters unauthorised access to the chamber. An extended shank socket set is required to engage the locking screw.

ACCESSORIES

STOCK CODE	DESCRIPTION
PC/UNIFORM/151076	Uniform chamber adjustment unit 760mm x 100mm x 15mm
PC/UNIFORM/251076	Uniform chamber adjustment unit 760mm x 100mm x 25mm
PC/UNIWEDGE/755012	Uniform support wedge 120mm x 50mm x 75mm

STOCK CODE	DESCRIPTION
YPCR/U12.5	12.5Kg Unipak® rapid curing polyester resin mortar
YPCR/U25	25Kg Unipak® rapid curing polyester resin mortar
SCREWLIFT	Manhole cover levelling system

NOTES

Where 3-flange D400 Gully Grate assemblies are employed, we recommend that they are installed against a kerb, not in an open highway location.

The D400 load capability of these Group 3 products also offers the benefit of making them suitable for exposure to Group 4 traffic types. Where 3-flange D400 Gully Grate assemblies are employed, we recommend that they are installed against a kerb, not in an open highway location. All values stated are nominal within 2.5% tolerance.

1. Wrekin Products Ltd is continually seeking to improve our products and therefore reserves the right to alter product specifications without prior notice.
2. It is the responsibility of all users to satisfy themselves the above data is current.
3. Installation details are available on request.
4. All Wrekin products are supplied subject to our Terms and Conditions of Sale

Tel: 01543 440 440
wrekinproducts.com